Lec 02: Induction.

Proof by Contradiction.

⇒ To Prove P is true,
we assume P is false.
(Ex) $\neg P$ is T) then use that
hypothesis to derive.
a falsehood or Contradiction.

if) $\underbrace{\neg P}_{\text{false}} \Rightarrow F$ is true
⇒ P is true.

Ex) Thm: $\underbrace{\sqrt{2} \text{ is irrational.}}_{P}$

Pf) by Cont.
Assume for purpose of Contradiction.
that $\sqrt{2}$. is rational.

$\Rightarrow \sqrt{2} = \frac{a}{b}$ (fraction in lowest term)

$\Rightarrow 2 = \frac{a^2}{b^2}$

$\Rightarrow 2b^2 = a^2$

$\Rightarrow$ a is even. $(2 \mid a)$

$\Rightarrow 4 \mid a^2$

$\Rightarrow 4 \mid 2b^2$

$\Rightarrow 2 \mid b^2$

$\Rightarrow$ b is even.

$\Rightarrow \frac{a}{b}$ is not in lowest terms
⇒ Contradiction. ∴ $\sqrt{2}$ is irrational. ∎

Induction axiom

Let $P(n)$ be a predicate

If $P(0)$ is true and

$\forall n \in \mathbb{N}\ (P(n) \Rightarrow P(n+1))$ is true.

then $\forall n \in \mathbb{N}$ $P(n)$ true.

If $P(0)$, $P(0) \Rightarrow P(1)$, $P(1) \Rightarrow P(2)$, ... are true.

then $P(0), P(1), P(2)$ .... are true

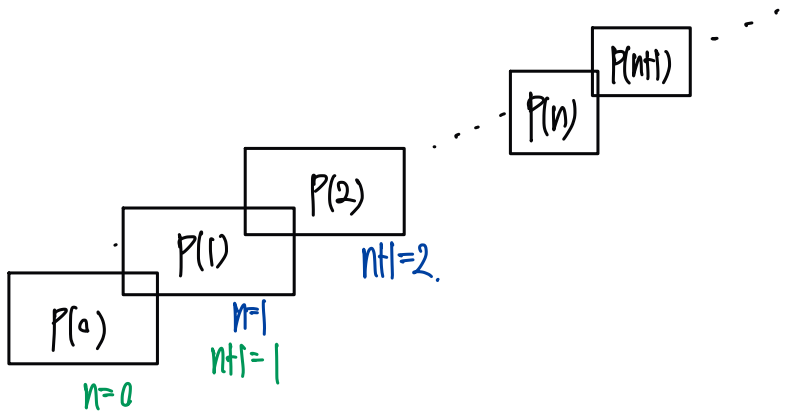

Thm: $\forall n \geq 0$ $\quad 1+2+3+\cdots+n = \frac{n(n+1)}{2}$

$$\sum_{i=1}^{n} i = \sum^{1\leq i\leq n} i = \sum_{1\leq i\leq n} i$$

If) $n=1$ $\quad 1+2+\cdots+n = 1$

If) $n\leq 0$ $\quad 1+2+\cdots+n = 0.$

If) $n=4$ $\quad 1+2+3+4 = 10 \Leftrightarrow \frac{4\cdot 5}{2} = 10$

Pf): by induction.

Let $P(n)$ be proposition that $\sum_{i=1}^{n} i = \frac{n(n+1)}{2}$

$\boxed{\text{Base case}}$ $P(0)$ is true.

$\sum_{i=1}^{0} i = 0 = \frac{0(0+1)}{2}$ ✓

$\boxed{\text{Inductive step}}$ For $n\geq 0$, show $P(n) \Rightarrow P(n+1)$ is true.

$\forall n \geq 0$

$P(n) \Rightarrow P(n+1)$

Assume $P(n)$ is true for purpose of induction.

(i.e, assume $1+2+\cdots+n = \frac{n(n+1)}{2}$)

need to show

$$1+2+\cdots+(n+1) = \frac{(n+1)(n+2)}{2}$$

$1+2+\cdots+n+(n+1)$

$\hookrightarrow \frac{n^2+n}{2} + n+1 = \frac{n^2+n+2n+2}{2} = \frac{(n+1)(n+2)}{2}$ ∎

Thm: $\forall n \in \mathbb{N}$ $3 \mid (n^3 - n)$

Pf) by induction

let $P(n)$ $3 \mid (n^3 - n)$

$\boxed{\text{Base case}}$ $n = 0$ $3 \mid (0 - 0)$ ✓

$\boxed{\text{Inductive step}}$ For $n \geq 0$, show $P(n) \Rightarrow P(n+1)$ is True.

Assume $P(n)$ true, ie. $3 \mid (n^3 - n)$

Examine $(n+1)^3 - (n+1) = n^3 + 3n^2 + 3n + 1 - (n+1)$

$= \underline{n^3 + 3n^2 + 2n}.$

$= n^3 - n + 3n^2 + 3n.$

$\boxed{\text{Base case}}$ $P(b)$ is true

induction step $\forall n \geq b$ $P(n) \Rightarrow P(n+1)$

Gn $\forall n \geq b$ $P(n)$

Thm (Not!) All horses are the same color.

Pf. by induction

$P(n)$: In any set of n horses,
the horses are all the same color

$\boxed{\text{base case}}$ $P(1)$ true since
just 1 horse

Induction step: Assume $P(n)$ to prove $P(n+1)$

Consider a set of $n+1$ horses $H_1, H_2, \cdots, H_{n+1}$

Then $H_1, H_2, \cdots, H_{n+1}$ are the same color

$H_2, H_3, \cdots, H_{n+1}$ " " "

Lec 03: Strong induction.

Good Proofs are:

- Correct
- Complete
- clear.
- brief.
- elegant
- well organized.
- in order.

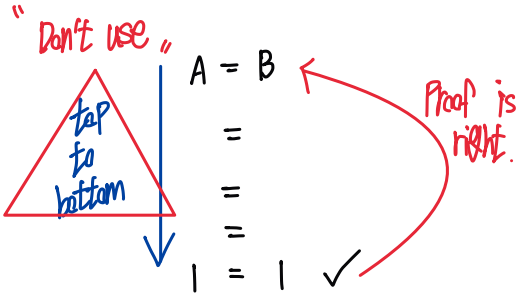

Problem. Find a sequence of moves to go.

from

A	B	C
D	E	F
G	H	I

1 inversion

to

A	B	C
D	E	F
G	H	

0 inversion

Legal move: Slide a letter into adjacent blank sequence

Fermat's Last thm

$\forall n \geq 2 \ \neg \exists x, y, z \in \mathbb{N}$

$x^n + y^n = z^n$.

Thm: There is no sequence of legal moves to invert G & H and return all other letters to their original position.

Row move

Ex)

A	B	C
D	G	
E	F	H

$\Rightarrow$

A	B	C
D		G
E	F	H

Natural order

1	2	3
4	5	6
7	8	9

Lemma 1: A row move does not change the order of the items

Proof: ~~obvious~~ In a row move we move we an item from same cell i, into an adjacent cell $i-1$ or $i+1$. Nothing else moves Hence the order of items is preserved ∎

Column moves

Ex)

A	B	C
D	F	
H	E	G

$\Rightarrow$

A	B	C
D	F	G
H	E	

Ex1)

A	B	C
D		G
H	E	F

$\Rightarrow$

A		C
D	B	G
H	E	F

Lemma 2: A column move changes the relative order of precisely 2 pair of items

proof: In a column move, we move an item in cell i to a blank spot in $i-3$ or $i+3$

When an item moves 3 positions, it changes order with 2 items ($i-1, i-2$ or $i+1, i+2$) ∎

Def: A pair of letter L_1 & L_2 is an inversion.

if L_1 precedes L_2 in alphabet but L_1 is after L_2 in puzzle

A	B	C
F	D	G
E	H.	

(D, F), (E, F), (E, G)

$\Rightarrow$ "3"

Lemma 3 : During a move, the # of inversions can only increase by 2, decrease by 2 or stay the same

Pf : Row move : no change (by Lemma 1)

Column move : · 2 pairs change order (by Lemma 2)

Case A, B, C

- A, both pairs were in order ⇒ # inversions ↑ 2
- B, both pair were inverted ⇒ # inversions ↓ 2.
- C one pair inverted ⇒ # inversion stay the same

Corollary 1 : During a move, the parity (even/odd) of # inversions does not change